WiFi/LoRa/ISM Communication Board

Compact embedded communication board integrating WiFi, LoRa, and ISM 868MHz connectivity, designed for flexible wireless communication in embedded and field-deployable systems.

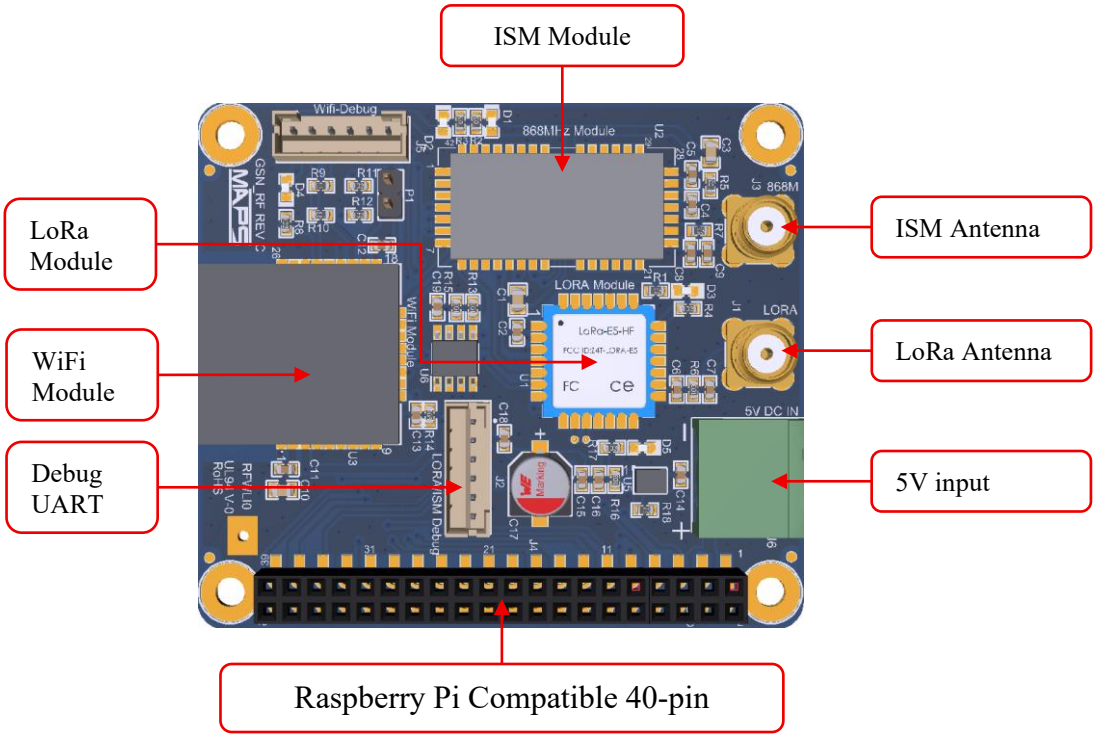

Key Highlights

- **Multi-protocol wireless support (WiFi, LoRa, ISM 868MHz)**
- **Onboard EEPROM for configuration**
- **Independent debug UART for each module**
- **3.3V TTL communication interface**
- **Raspberry Pi compatible 40-pin header**
- **Compact 56 × 65 mm form factor**

Electrical & Power

- Input Supply: 5V
- Onboard Regulation: 3.3V
- Power Options
    - 2-pins connector
    - 40-pin header (RP compatible)

UART Communication

- Logic Level: 3.3V TTL compatible
- Baud rate default 115200 bps
- Dedicated debug UART available for each wireless module

Wireless

- WiFi – InnoPhase INP1011-A2-ITS
- LoRa – Seeed LORA-E5-HF
- ISM 868MHz – Radiocrafts RC1880CEF

System Architecture

- Independent wireless modules
- Independent host interface via UART (per module) and shared I2C for configuration
- EEPROM-based configuration storage

Mechanical & Integration

- Compact 56 × 65 mm form factor

Typical Applications

- Remote monitoring systems
- Industrial IoT devices

Design & Customization Support

- Complete design files (schematics, Gerber, and assembly data) can be shared on request
- Supports customization and design adaptation for specific applications